Verification & Validation Python-Based Web Service

Mark Vickers, Brigham Young University,

AX Division, George Christianson,
Lawrence Livermore National Laboratory,

Daktools is a python interfaces for DAKOTA. It was refactored to enhance extensibility/maintainability and was extended to automate the process of transferring and storing run information.

Refactored: *Extensibility and Maintainability*

DAKOTA **is a massively parallel toolkit for optimization, uncertainty quantification, and statistical analysis of simulation codes.**

DakTools **is a python tool that interfaces DAKOTA with simulation codes. DakTools provides machine independence and greatly facilitates the ability to do parameter studies.**

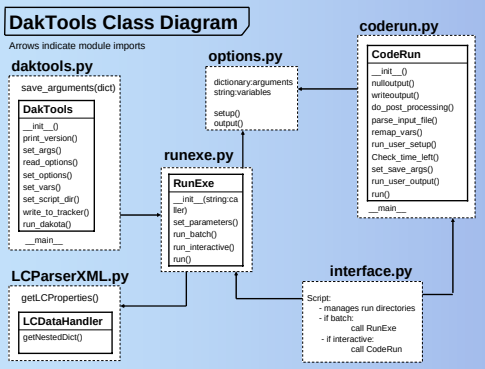

DakTools Sequence Diagram

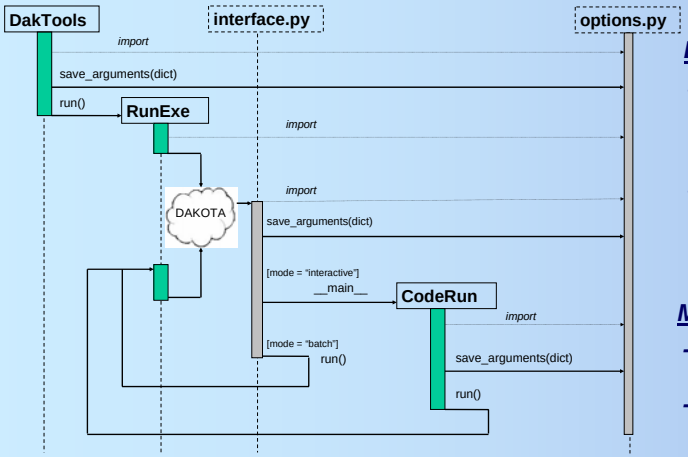

Extensibility

- **LC configurations embedded in the Python script are now stored in an external XML file.**
- **Will eventually be able to send runtime info to the server to show run's progress on a web page.**

Maintainability

- **Scripts organized into classes and functions**
- **Global variables centralized**

Extended: *Automated Data Transfer and Storage via SOAP*

A web service automates the process of transferring and storing run information (outputs, input decks, and database references) to the AX Division's V&V server, Friedrichs. The web service uses SOAP to communicate.

What is SOAP? ***SOAP (Simple Object Access Protocol) specifies an XML based communication between two heterogeneous applications over http (or https in our case) .***

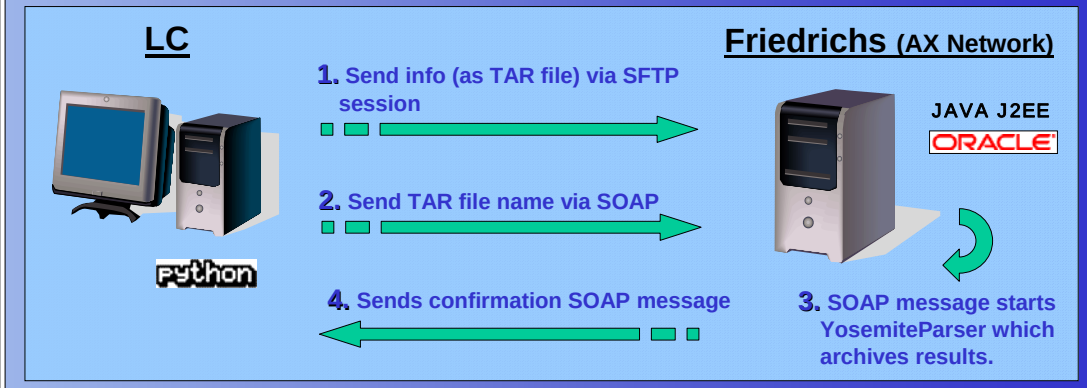

The client is written in Python and builds on DakTools.

The Java web service is managed by Oracle's Container For Java. Maven is used for build management.

Future Work: ***Use SOAP to pass runtime information (even graphics) to Friedrichs, allowing scientists to see the progress of runs from a web browser***

This work was performed under the auspices of the U.S. Department of Energy by University of California Lawrence Livermore National Laboratory under contract No. W-7405-Eng-48.

UCRL-POST-214232